Axiom

Flat Screen Lift Cabinet

Dimension Drawing

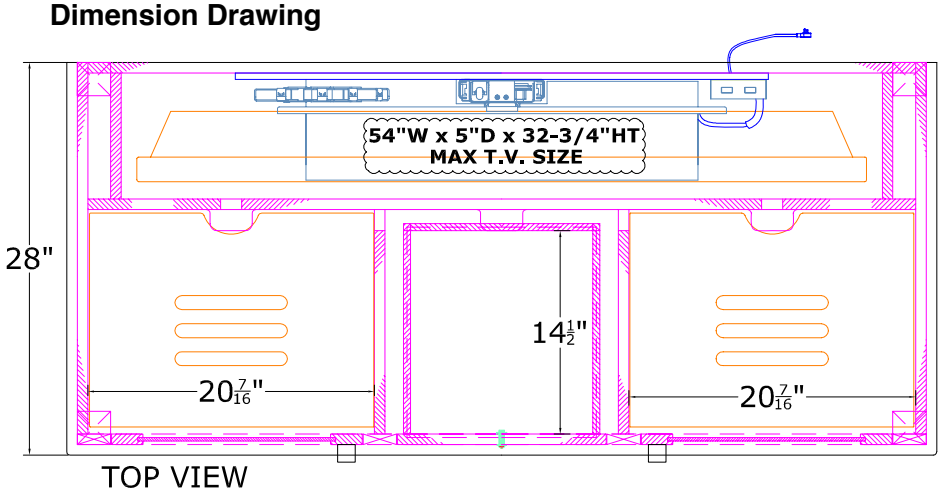

TOP VIEW

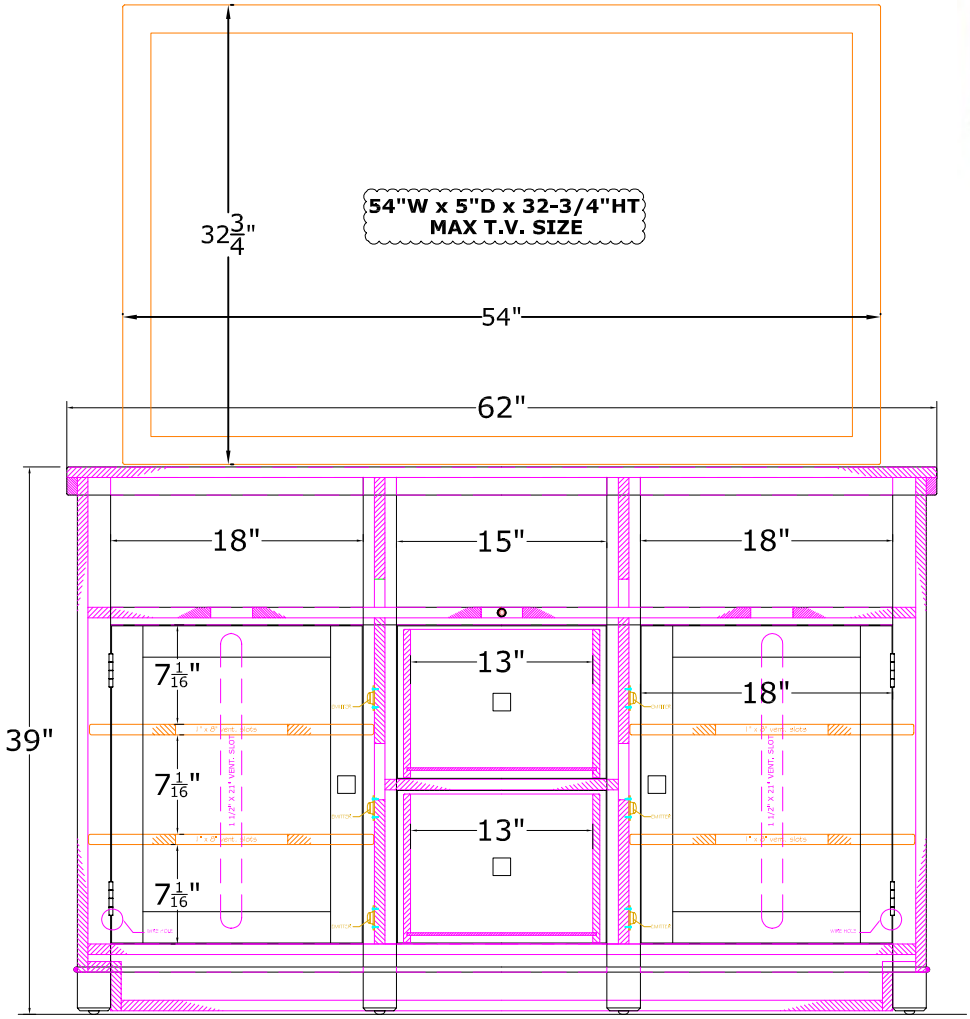

FRONT VIEW

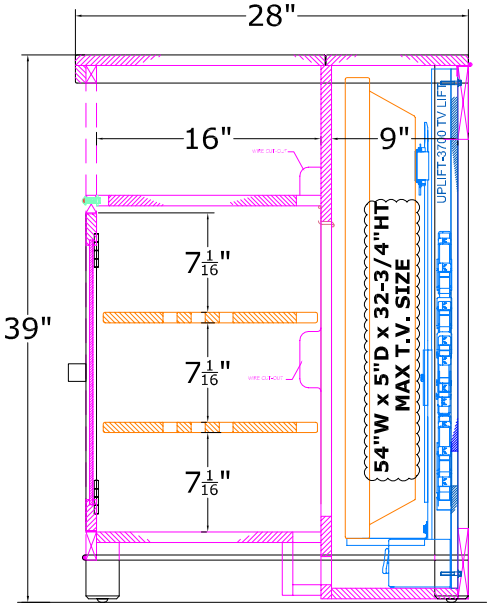

SIDE VIEW

© 2009 ImportAdvantage